PRODUCT SPECIFICATIONS

Brut Short Faucet with Cap Spout

BRUT-DM-CAP-S

Dec 2014

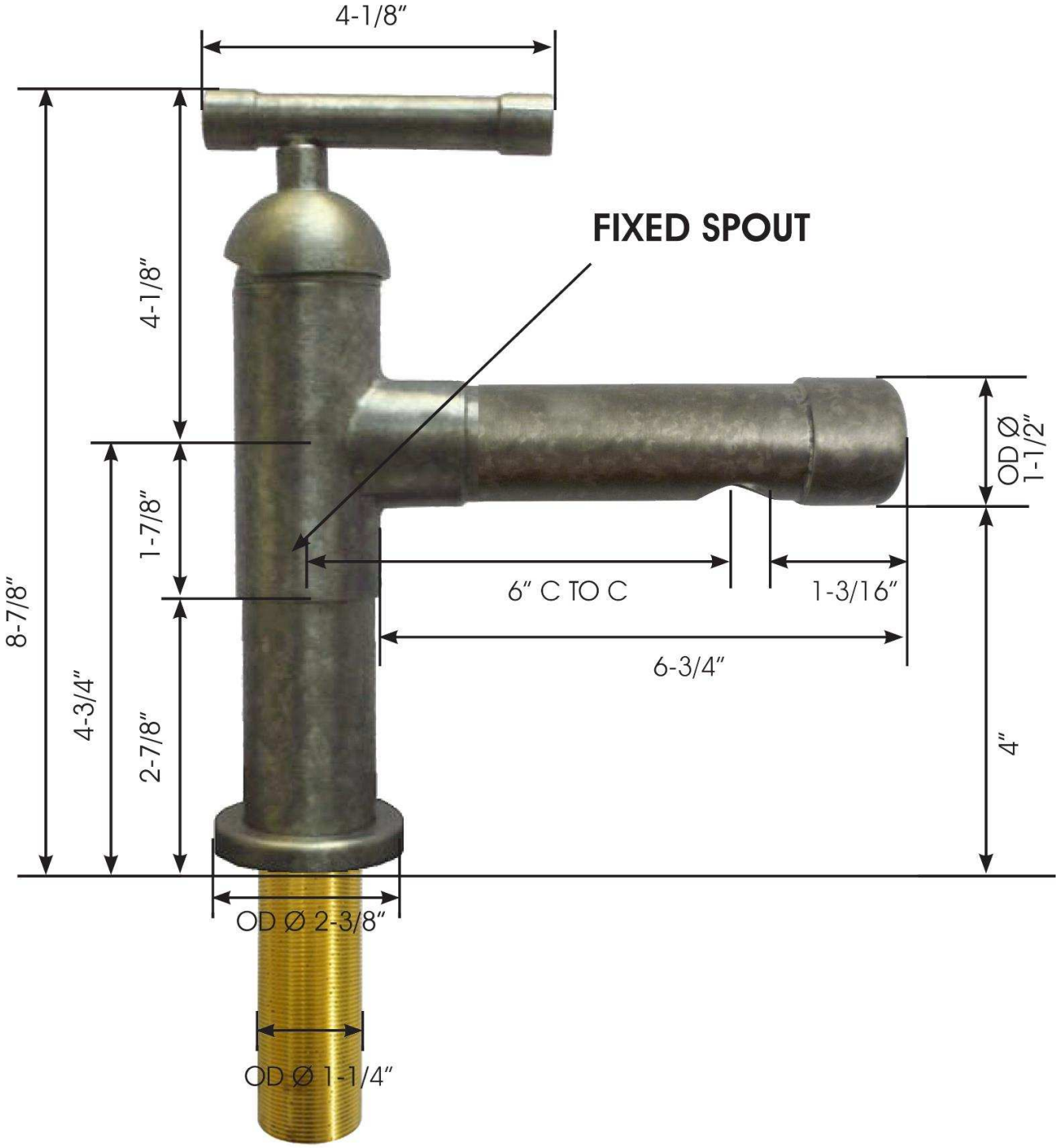

- ADA Compliant
- Includes Flip-Top Drain w/o overflow
- Custom sizes and finishes available

Connection	3/8" Compression
Valve	1/2"
GPM	1.5

800.330.5553 | f 707.789.9201 | info@sonomaforge.com